SPECIFICATIONS

PASSBAND : 31.6 - 32.2 GHz	PRESSURIZATION: SEALED TO 2.0 PSIG
P/B LOSS : 0.5 dB MAX	FINISH FLANGE FACES: COPPER ALLOY EXTERIOR: BLACK PAINT, COLOR NO. 37038 PER FED-STD-595
VSWR : 1.3:1 MAX	
REJECTION 66 dB MIN: 34.0-34.6 GHz	

REVISIONS

REV	DESCRIPTION	DATE	APPROVED
A	SEE ECN #2332	06-16-09	H.S.

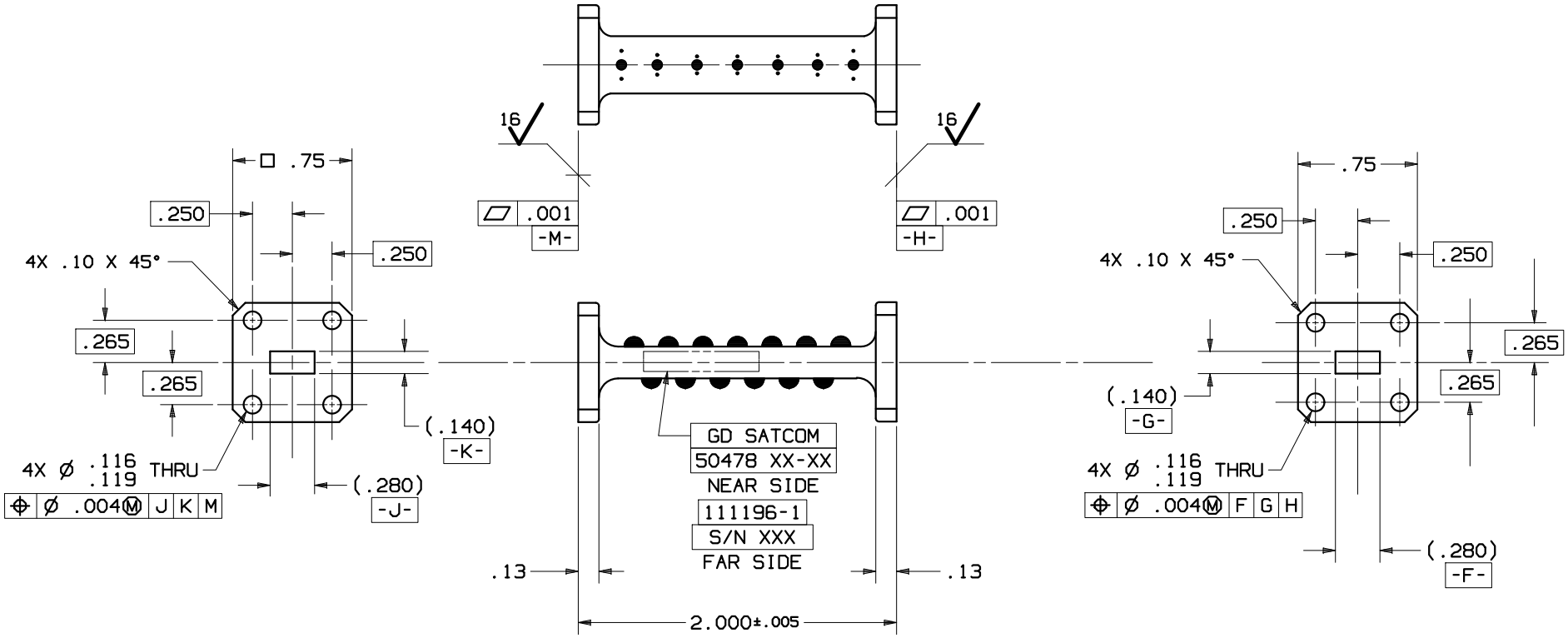

NOTES: UNLESS OTHERWISE SPECIFIED.

UNLESS OTHERWISE SPECIFIED	APPROVALS	DATE
INTERPRET DIMENSIONING & TOLERANCING PER ANSI Y14.5M-1982. DIMENSIONS ARE IN INCHES. DIMENSIONS SHOWN IN ( ) ARE FOR REFERENCE ONLY. TOLERANCES ARE:	DRAWN: A.B.DUDAS	10-1-95
SURFACE- 63	CHECKED: H.Spieleder	06-16-09
TOLERANCES- .XX ±.01, .XXX ±.002, .XXXX ±.0010, ANGLES ±0°30'	ENGRG:	
MATERIAL:	MFG:	
	QA:	
	EAR CONTROLLED: Export or re-export subject to 15 CFR 700-799.	

GENERAL DYNAMICS PROPRIETARY

GENERAL DYNAMICS
SATCOM Technologies
3111 Fujita St., Torrance, CA 90505, (310) 539-6704

Ka-BAND BANDPASS FILTER

SIZE	FSCM No.	DWG No.	REV
C	50478	111196-1	A

SCALE: 2:1 SHEET 1