Make Cover to Fit This Antenna

Manufacturer _____ Overall Diameter _____

(EXAMPLE: Scientific Atlanta 4.5 meter)

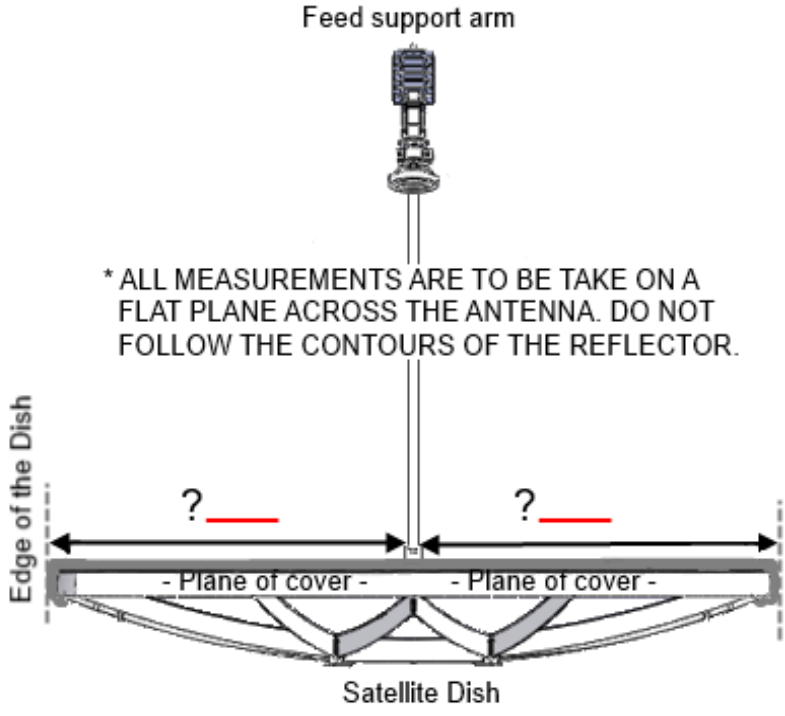

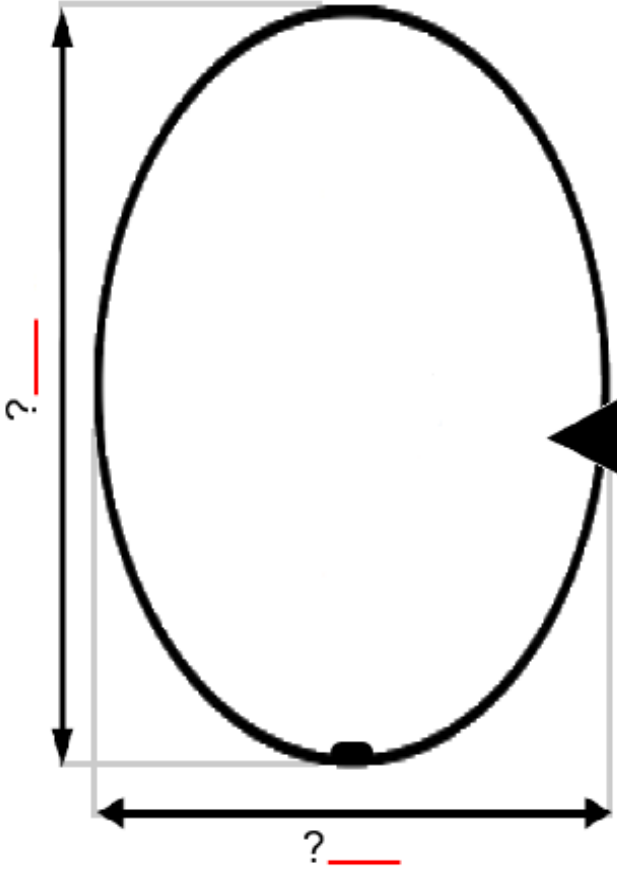

Fill-In

Dimensions of your existing dish

You have indicated you have a OFFSET (Egg shaped) antenna with 1 feed support arm.
Fill in dimensions here.
Indicate any openings that need to be made within the plane of the cover, for protruding objects to pass through.

Answer the questions below for your feedhorn type:

PRIME FOCUS FEEDS
(located in front/center of dish)

- Diameter of feed support arms ?____
- How many feed suport arms ?____
- Support arms mounted to edge or inset ?____
- How far are feed support arms from each other ?____
- How thick is the edge lip of the antenna ?____

CASSAGRAIN FEEDS (sub-reflector "bounces" signal to feed in back of dish)

- What is the diameter of the feed tube ?____
- Where are the sub-reflector support arms ?____

Color: BLACK
Black is preferred color for heat absorption to melt snow

"We have verified the above information is accurate AND understand that this item is custom ordered and non-returnable"

Signature Required: x _____

Customer Signature Date

SatelliteDish.com (954) 941-8883

Notes: