24926 Highway 108
Sierra Village, CA 95346
Phone: (800) 545-1022
Fax: (209) 586- 1026
E-Mail: sales@olsontech.com

PremiseNode OTPN-1000 / OTPT-300A

HIGH OUTPUT FTTP PREMISE NODE: OPTICAL RECEIVER with OPTIONAL RETURN TRANSMITTER

Features / Benefits

- Flagship Model of the OT *"Premise Node"* family: *High-Output, Premium-Performance & Full-Featured*
- Stable, High RF Output Level (+48 dBmV) over Wide (+3 to -6 dBm @ 1310/1550 nm) Optical Input range
- Superior Low-Noise Performance (CNR > 49 dB @ -6 dBm Optical Input) & CSO/CTB Specs (> 64/69 dB)
- Designed to Directly Feed > 64 television outlets in FTTB applications (more with line extender amplifiers)
- Inter-Stage Slope and RF Input/Output controls via internal Plug-in EQs and Plug-In attenuator Pads
- Calibrated external Optical Input Power Meter (1V/mW) and internal RF test points (@ -20 dB)
- Full CATV Forward Path Bandwidth (Analog and QAM Digital) 54-870 MHz (+/- 1.0 dB)
- FP, DFB & CWDM Return Laser Transmitter options (field-installable) for two-way DOCSIS operation
- Choice of Return/Forward Frequency Diplexer Split (42/54 MHz -or- 65/85 MHz)
- Built-in Universal 90-240 VAC (@ 50/60 Hz) CE-approved Power Supply for local powering
- > 6 kV surge tolerant RF output and SMT construction for consistency, reliability & performance
- Compact (3"x 5"x 8"), Lightweight, Rugged machined aluminum housing for easy installation

The **OLSON TECHNOLOGY, INC. PremiseNode Model OTPN-1000** is a high-output, high-performance, full-featured CATV optical node designed around the very latest optical receiver technology to reliably deliver a full slate of multiplexed video, high speed data & telephony services in an HFC/PON fiber-to-the-premise (FTTP) environment.

The unit is ideally suited for direct fiber transmission of CATV RF signals in FTTC, FTTH, MDU, industrial, corporate, government, educational or other I-Net applications where a high performance, compact indoor node is required. The unit is constructed with high quality components to enable it to meet or exceed its performance specifications over a wide temperature range in an uncontrolled environment, but does require protection from the elements. It is configured for standalone desktop, shelf or wall-mounting, or can be 2RU 19" EIA rack-mounted via the optional **OTLL-RMKIT2** kit. The **OTPN-1000** is forced-air cooled via an external high-MTBF fan, which is designed to be field-replaceable without interrupting operation. The base "receiver-only" model is a rugged, self-contained device with an optical input range which is wider and more sensitive than traditional CATV node receivers, permitting its use in situations where there is a need to extend the fiber link deeper into the subscriber base. In addition, the **OTPN-1000** has innovative output RF level controlling circuitry which delivers stable output level despite potential fluctuations in the power of the incoming optical signal. Adjustments are made with reliable plug-in attenuator pads.

The **OTPN-1000** includes a unique provision which provides for the addition of an optional high-performance return FP, DFB or CWDM laser return transmitter, creating a complete two-way, DOCSIS-compatible indoor node in a low-profile, integrated package. This "sidecar" module, the **OTPT-300A**, is a separate unit, designed so it can be installed up-front or added later in the field with a minimum of effort. The **OTPT-300A** also features an external auxiliary wideband (5-300 MHz) RF input, which eliminates the need for costly sub-band modulators and demodulators in local origination upstream video applications.

The OTPN-1000 is the perfect companion to the Olson Technology, Inc. **LaserLite** (Models OTOT-870-x & OTOR-300) and **LaserPlus** (Models LP-OT-x and LP-OR) forward TX and return RX product families, but is also designed to mate with optical transmitters and return receivers from most leading manufacturers.

OTPN-1000 / OTPN-1000-PAL *(Forward Optical Receiver)* SPECIFICATIONS

RF OUTPUT & PERFORMANCE PARAMETERS:

Frequency Range (& Flatness)	54 – 870 MHz / 85 – 870 MHz (+/- 1.0 dB)
Output Level *	+48 dBmV @ 550 MHz *
Return Loss	>16 dB
Impedance	75 Ohm
CNR*	>53 dB @ -1 dBm; >49dB @ -6 dBm optical input*
CSO*	>64 dBc @ -1 dBm optical input*
CTB*	>69 dBc @ -1 dBm optical input*
RF Gain Adjustment	0 – 18 dB *(with Model# 95080x plug-in pad)*
Slope Adjustment	4 – 17 dB *(with Model# 95180x plug-in equalizer)*
RF Test Point	-20 dB *(internal)*
RF Output Connector	Type F

** NOTE: Typical; Measured with 10 dB slope to 870 MHz; 8dBm optical transmitter with OMI @ 2.8%, and; 77 NTSC Channel loading to 550 MHz & digital loading to 870 MHz (-6 dB below analog).*

OPTICAL PARAMETERS:

Wavelength	1280 - 1600 nm
Optical Input Power Range	-6 dBm to +3 dBm
Return Loss	>60 dB with APC type connector
Optical Input Power Test Point	1 V/mW *(external)*
Optical Connector	SC/APC standard; FC/APC optional); 8 degree APC

ELECTRICAL, ENVIRONMENTAL & MECHANICAL PARAMETERS:

Dimensions	3” H x 4.5” W x 8” D (7.75cm x 12.1cm x 20.5cm)
Weight	3 lb. (1.12 kg)
Operating Temperature Range	-10 to +55 degrees C
Enclosure IP Rating	IP20
Powering	90 – 240 VAC @ 50 – 60 Hz via IEC320 connector
Power Dissipation	19 W maximum
Cooling	Fan cooled, forced air *(Field-replaceable)*

March, 2003

GENERAL SPECIFICATIONS : OTPT-300A Series *(Return Optical Transmitters)*

RF INPUT & PERFORMANCE PARAMETERS:

Frequency Range (& Flatness) via Diplexer	5 - 42 MHz *(NTSC)* / 5 – 65 MHz *(PAL)* (+/- 1.0 dB)
Freq. Range (& Flatness) via Ext. Aux. RF Input	5 – 300 MHz (+/- 1.0 dB)
Return Loss	>16 dB @ 5-42 MHz or 5-65 MHz

OPTICAL PARAMETERS:

Return Loss	>60 dB with APC type connector
Laser Power Test Point	1 V/mW *(external)*
Laser Current Test Point	1 V/50 mA *(external)*
Optical Connector	SC/APC standard; FC/APC optional); 8 degree APC

ELECTRICAL, ENVIRONMENTAL & MECHANICAL PARAMETERS:

Dimensions	2.5" H x 0.75" W x 7.1" D (6.25cm x 1.8cm x 18cm)
Weight	0.5 lb. (0.2 kg)
Powering (& Power Dissipation)	via OTPN-1000 (4 W maximum)

OTPT-302A & OTPT-303A SPECIFICATIONS *(FP Return Optical Transmitters)*

RF INPUT & PERFORMANCE PARAMETERS:

Return Path NPR (FP)**	>15dB over 37 dB NPR **
NPR 37dB Threshold	-57 dBmV/Hz

***NOTE: As measured with 10dB of fiber and OTOR-300 High Sensitivity Return Band Receiver*

OPTICAL PARAMETERS:

Wavelength	1310 nm +/- 20nm
Laser Type; Optical Output Power (OTPT-302A)	Fabry-Perot (Unisolated); +1.6 mW +/- 0.5 mW
Laser Type; Optical Output Power (OTPT-303A)	Fabry-Perot (Isolated); +2.0 mW +/- 0.5 mW

OTPT-304A & OTPT-305A SPECIFICATIONS *(DFB Return Optical Transmitters)*

RF INPUT & PERFORMANCE PARAMETERS:

Return Path NPR (DFB)**	>15 dB over 41 dB NPR **
NPR 41dB Threshold	-57 dBmV/Hz

***NOTE: As measured with 10dB of fiber and OTOR-300 High Sensitivity Return Band Receiver*

OPTICAL PARAMETERS:

Wavelength (OTPT-304A)	1310 nm +/- 20nm
Laser Type; Optical Output Power (OTPT-304A)	Distributed Feedback: +3.0 mW +/- 0.5 mW
Wavelength (OTPT-305A)	1550nm +/- 20nm
Laser Type; Optical Output Power (OTPT-305A)	Distributed Feedback: +2.0 mW +/- 0.5 mW

OTPT-347A thru OTPT-361A SPECIFICATIONS *(CWDM Return Optical Transmitters)*

RF INPUT & PERFORMANCE PARAMETERS:

Return Path NPR (DFB)**	>15 dB over 41 dB NPR **
NPR 41dB Threshold	-57 dBmV/Hz

***NOTE: As measured with 10dB of fiber and OTOR-300 High Sensitivity Return Band Receiver*

OPTICAL PARAMETERS:

Wavelengths (OTPT-347 thru 361)	1470, 1490, 1510, 1530, 1550, 1570, 1590 or 1610 nm +/- 3 nm
Laser Type; Optical Output Power (OTPT-347 thru 361)	Course Wave Division Mux: +2.0 mW +/- 0.5 mW

December, 2003

ACCESSORIES

MODEL	DESCRIPTION
PAD-xxx	Single Pad (Forward or Reverse)
PAD-KIT-x	Pad Kits (Forward or Reverse)
OTLL-SCFCKIT	SC/APC to FC/APC Optical Connector Adaptor
OTLL-RMKIT-2	Rack Mount Kit (Holds 3 OTPN-1000's)
OTOA-1000	Optical Attenuator
OTLL-FANKIT	OTPN-1000 Replacement Fan Assembly

RELATED OLSON TECHNOLOGY PRODUCTS

MODEL	DESCRIPTION
OTPN-1000	Receive only wideband indoor node 5-42 MHz return band.
OTPN-1000-PAL	Receive only wideband indoor node 5-65 MHz return band.
OTOR-300	Indoor return band optical receiver.

OTPT MODELS

OT MODEL #	OT PART #	RETURN LASER
OTPT-302A	037-010471	1.6mw 1310nm FP
OTPT-303A	037-020471	2mw 1310nm ISO FP
OTPT-304A	037-000471	3mw 1310nm DFB
OTPT-305A	037-030471	2mw 1550nm DFB
OTPT-347A	037-040471	CWDM 2mw 1470nm DFB
OTPT-349A	037-050471	CWDM 2mw 1490nm DFB
OTPT-351A	037-060471	CWDM 2mw 1510nm DFB
OTPT-353A	037-070471	CWDM 2mw 1530nm DFB
OTPT-355A	037-080471	CWDM 2mw 1550nm DFB
OTPT-357A	037-090471	CWDM 2mw 1570nm DFB
OTPT-359A	037-100471	CWDM 2mw 1590nm DFB
OTPT-361A	037-110471	CWDM 2mw 1610nm DFB

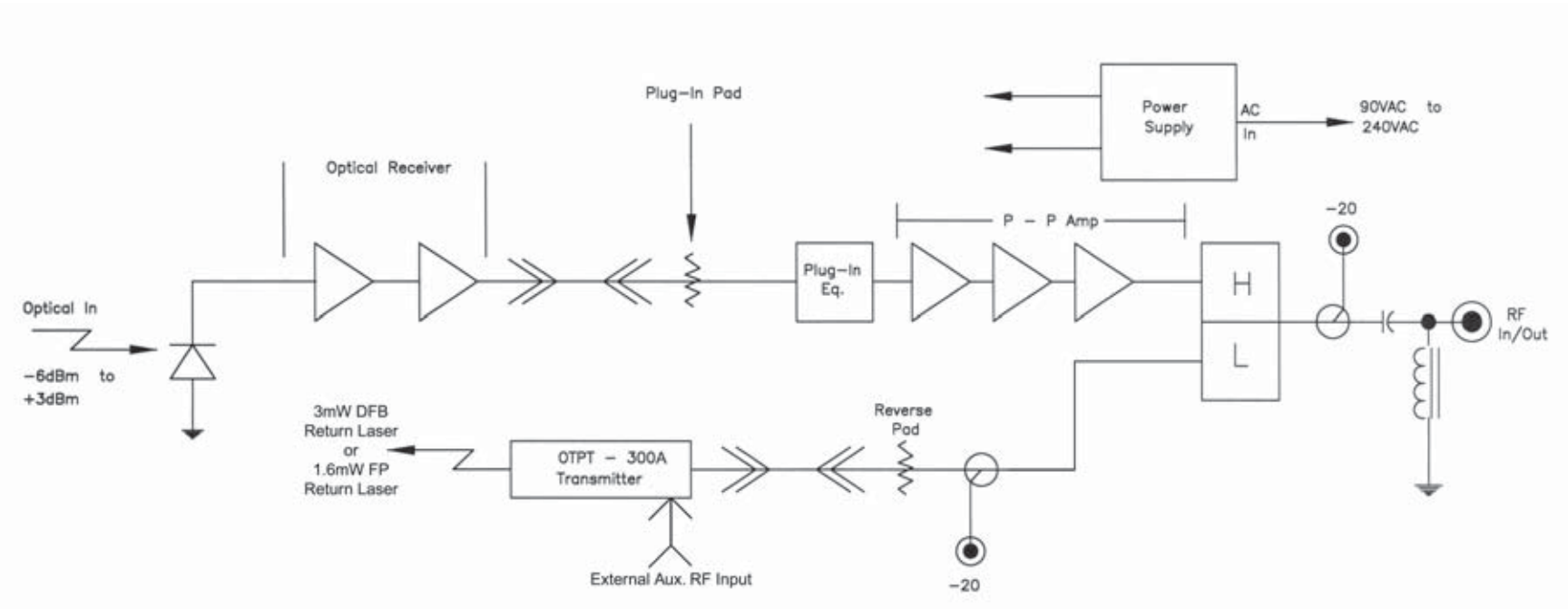
Plug–In Pad
Power Supply
AC In
90VAC to 240VAC
Optical Receiver
P – P Amp
–20
Plug–In Eq.
H
L
Optical In
–6dBm to +3dBm
RF In/Out
3mW DFB Return Laser or 1.6mW FP Return Laser
OTPT – 300A Transmitter
Reverse Pad
External Aux. RF Input
–20

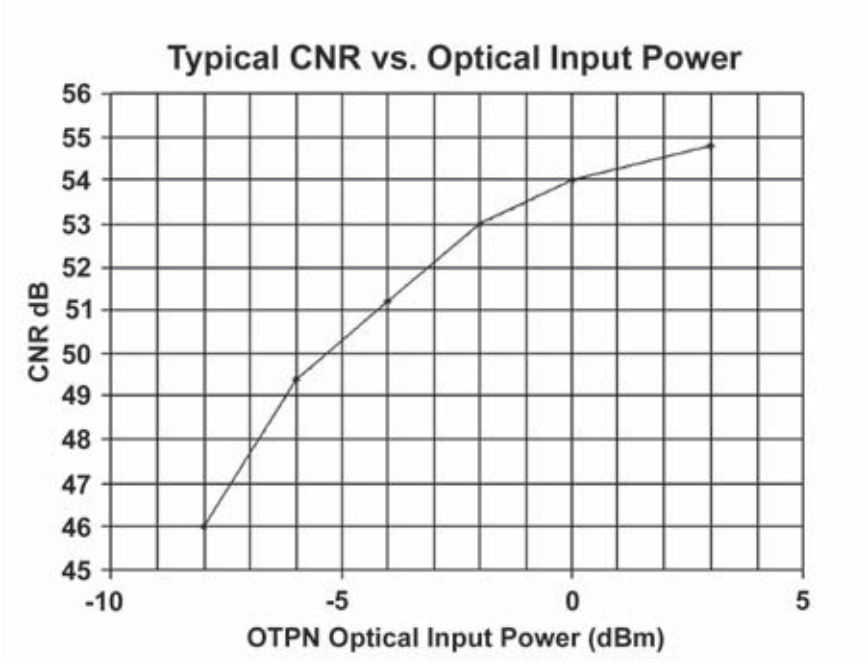

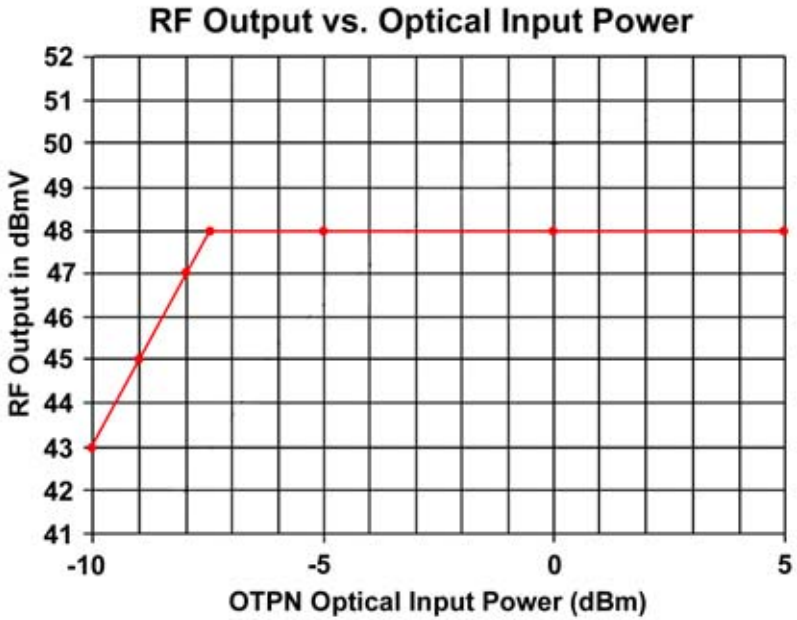

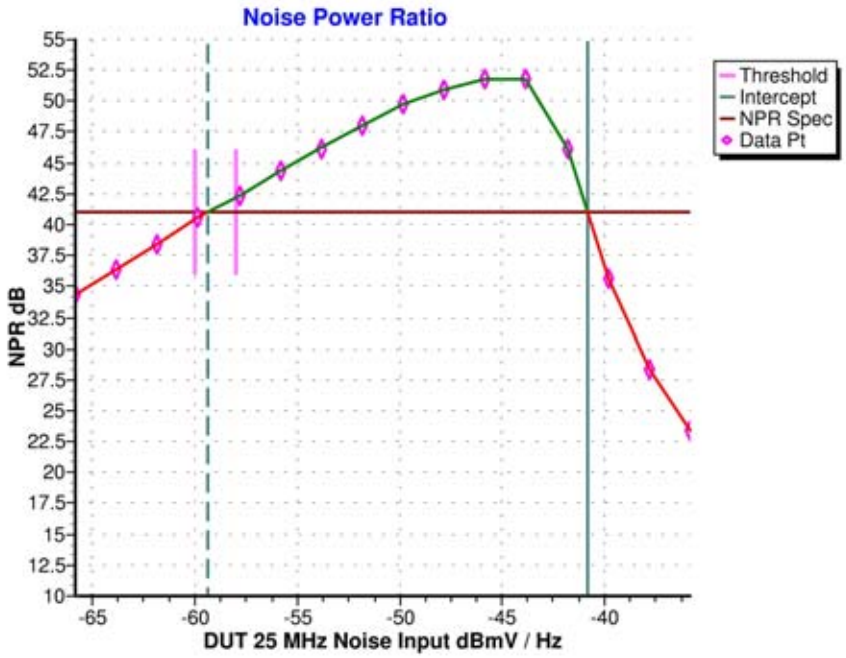

DFB Laser Option